BEAVER 25

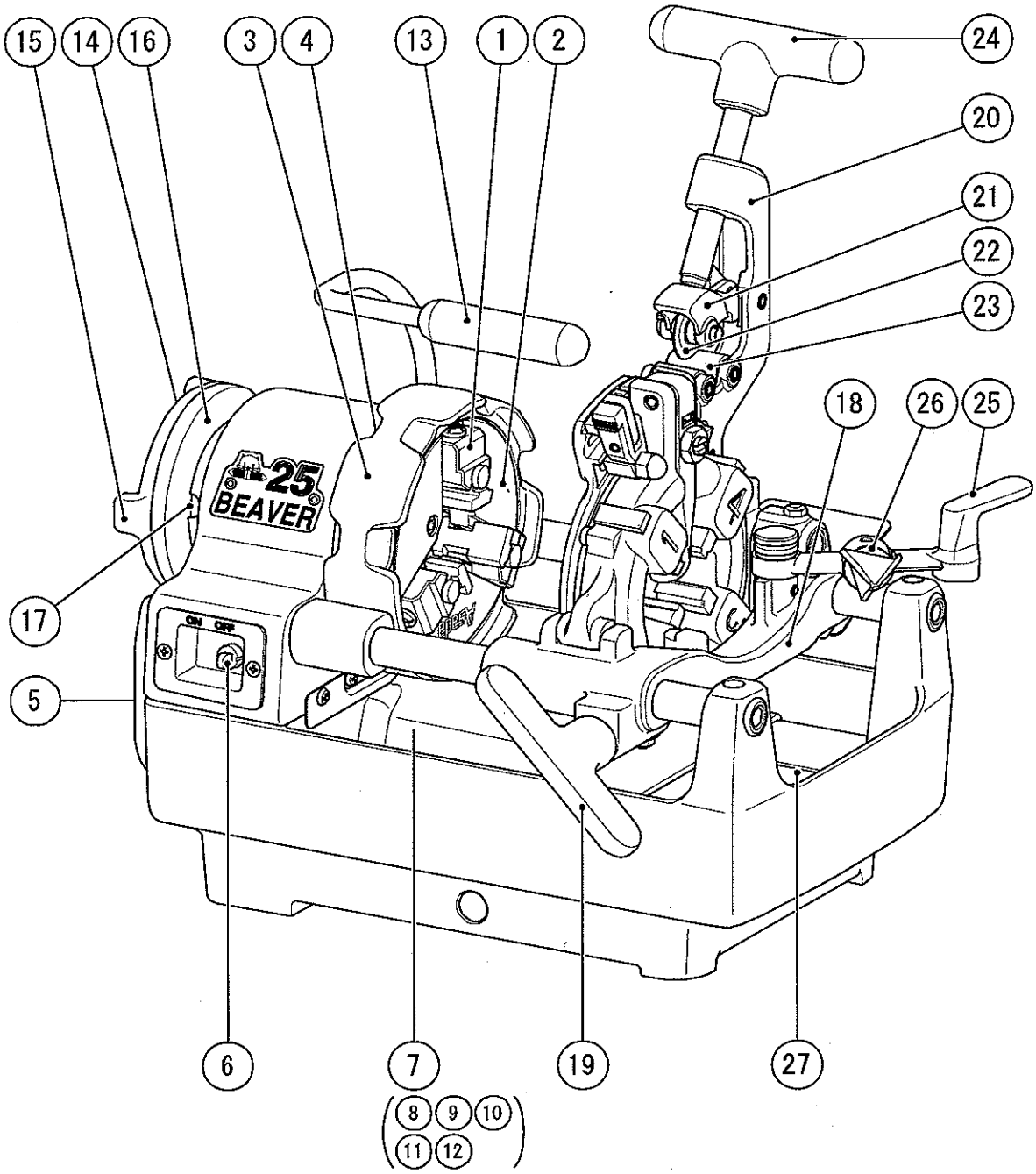
15
14
16
3
4
13
1
2
24
20
21
22
23
18
26
25
17
5
6
7
19
27
8
9
10
11
12
25
BEAVER
ON
OFF

MAIN PARTS

No.	Code No	Parts Name	Qty	
set	BE300	BE25 Hammer Chuck Complete	1	
1	AS176	Hammer Chuck Jaws Complete	1	
2	AS014	Hammer Chuck Body AS1	1	
3	BE301	BE25 Hammer Chuck Outer Ring	1	
4	AS015	Hammer Chuck Scroll AS1	1	
5	BE41L	BE25 Gear Pump	1	
6	87167	Switch	1	
7	BE319	BE25 Motor 100V	1	
7	BE712	BE25 Motor 120V	1	
7	BE713	BE25 Motor 220-230V	1	
7	BE714	BE25 Motor 240V	1	
8	70880	Stator 100V AS1	1	
8	70891	Stator 120V AS1	1	
8	70882	Stator 220V AS1	1	
8	70893	Stator 240V AS1	1	
9	70881	Armature 100V AS1	1	
9	70891	Armature 120V AS1	1	
9	70883	Armature 220V AS1	1	
9	70894	Armature 240V AS1	1	
10	70820	Carbon Holder	1	
11	70819	Carbon Brush	1	
12	70821	Carbon Cap	2	
13	BE327	BE50 Handle	1	
14	BE335	BE25 Scroll Assembly	1	
15	BE336	BE25 Scroll Body	1	
16	BE337	BE25 Scroll Cap	1	
17	AS035	BE25 Scroll	1	
18	BE341	BE25 Carriage	1	
19	BE342	BE25 Rack Handle	1	
set	BE345	BE25 Pipe Cutter Assembly	1	
20	BE346	BE25 Cutter Body	1	
21	BE347	BE25 Cutter Blade Holder	1	
22	AS058	Cutter Blade	1	
23	AS052	AS1 Cutter Roller	2	
24	BE349	BE25 Cutter Handle	1	
set	BE355	BE25 Reamer Assembly	1	
25	BE356	BE25 Reamer Holder	1	
26	BE357	BE25 Reamer Blade	1	
27	BE362	BE25 Oil Tank Lid	1	

No.	Code No	Parts Name	Qty	
—	BE321	BE25 Power Cord 100V-120V	1	
—	BE715	BE25 Power Cord 220V-240V	1	
—	AS050	AS1 Bracket Spring	1	
—	AS051	AS1 Cutter Blade Set Pin	1	
—	BE306	BE25 Guide Bar R	1	
—	BE307	BE25 Guide Bar F	1	
—	BE308	BE25 Spindle	1	
—	BE309	BE25 Spindle Gear	1	
—	BE310	BE25 Spindle Case Body	1	
—	BE311	BE25 Spindle Case Cover	1	
—	BE312	BE25 Output Shaft Pinion	1	
—	BE313	BE25 Output Shaft Reduction Gear	1	
—	BE314	BE25 1st Shaft Pinion	1	
—	BE315	BE25 1st Shaft Reduction Gear	1	
—	BE316	BE25 Oil Cover	1	
—	BE317	BE25 Switch Plate	1	
—	BE318	BE25 Machine Plate	1	
—	BE322	BE25 Beaver Plate	1	
—	BE323	BE25 Outer Ring Spacer	1	
—	BE324	BE25 Handle Arm	1	
—	BE325	BE25 Handle Holder	1	
—	BE326	BE25 Handle Knob	1	
—	BE330	BE25 Handle Pin	1	
—	BE331	BE25 Handle Spring	1	
—	BE361	BE25 Frame	1	
—	BE363	BE25 Filter	1	
—	BE364	BE25 Frame Under Cover	1	
—	BE365	BE25 Pomp Cover	1	